49 Life Sciences Parkway • Steinbach, MB R5G 2G7
Phone: 1-800-775-0018 • (204) 320-1801
Fax: (204) 346-1450
Email: info@urbanpark.com
Visit Us At: www.urbanpark.com

urban park

SPECIFICATION SHEET

Denali Series
Ash Urn

OPTION 'A' (Mounting)

- ☐ Embedded
- ☐ Surface Mount
- ☐ Free Standing

OPTION 'B' (Side Panel)

See Attached Page

OPTION 'C' (Finish)

- ☐ Galvanized
- ☐ Powder Coat (includes Autophoretic Coating)
- ☐ Stainless Steel # 4 Polish

General Notes:

1.) Customer responsible for installation.
2.) Do not scale drawing.
3.) Surface mounted ash urn, with perforated mesh side panel shown.

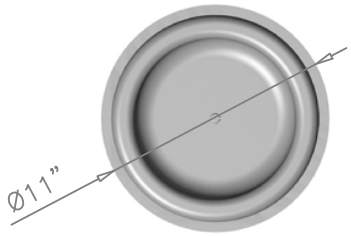

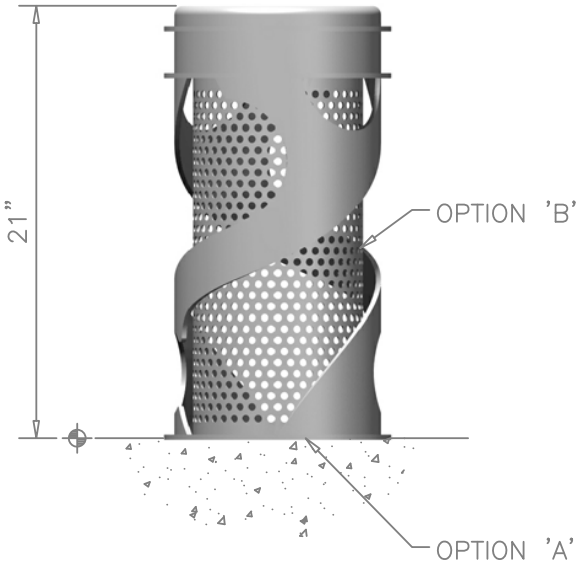

ASH URN
DENALI SERIES

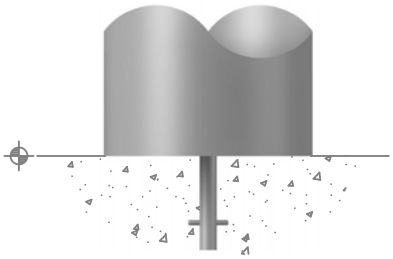

EMBEDDED
OPTION 'A'

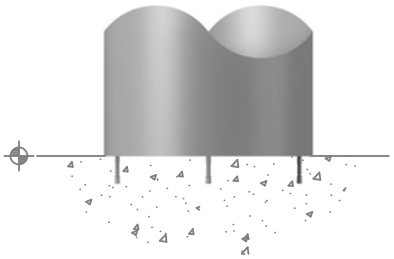

SURFACE MOUNT
OPTION 'A'

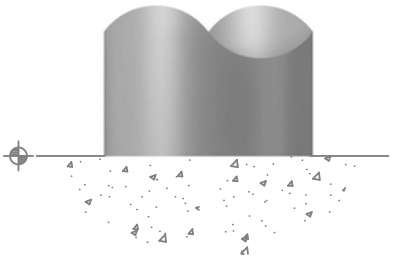

FREE STANDING
OPTION 'A'

49 Life Sciences Parkway • Steinbach, MB R5G 2G7
Phone: 1-800-775-0018 • (204) 320-1801
Fax: (204) 346-1450
Email: info@urbanpark.com
Visit Us At: www.urbanpark.com

urban park

SPECIFICATION SHEET

Denali Series
Ash Urn

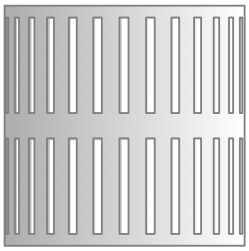

☐ Vertical Slot

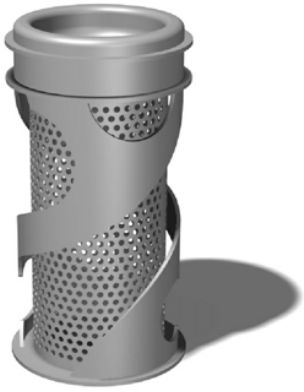

☐ Perforated Mesh

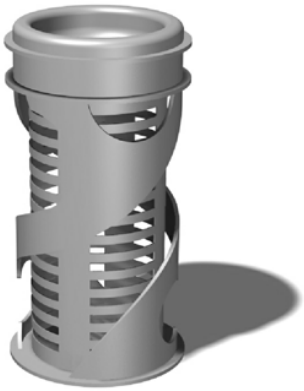

☐ Horizontal Slot

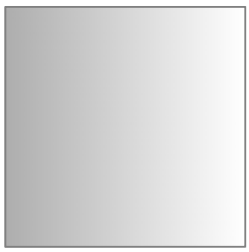

☐ Solid

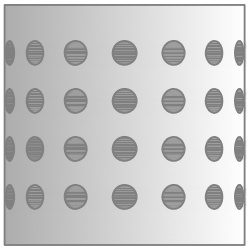

☐ Embossed

☐ Custom