49 Life Sciences Parkway • Steinbach, MB R5G 2G7
Phone: 1-800-775-0018 • (204) 320-1801
Fax: (204) 346-1450
Email: info@urbanpark.com
Visit Us At: www.urbanpark.com

urban park

SPECIFICATION SHEET

Fairmont Series
Backless Bench

OPTION 'A' (Length)
- ☐ 1 Seater
- ☐ 2 Seater
- ☐ 3 Seater
- ☐ 4 Seater
- ☐ 5 Seater

OPTION 'B' (Mounting)
- ☐ Embedded
- ☐ Surface Mount
- ☐ Free Standing
- ☐ Wall Mount

OPTION 'C' (Seat Pan)
See Attached Page

OPTION 'D' (Armrest)
- ☐ With Arm
- ☐ Without Arm

OPTION 'E' (Intermediate Armrest)
- ☐ With Intermediate Armrest
- ☐ Without Intermediate Armrest

OPTION 'F' (Finish)
- ☐ Galvanized
- ☐ Powder Coat (includes Autophoretic Coating)
- ☐ Stainless Steel # 4 Polish

General Notes:
1.) Customer responsible for installation.
2.) Do not scale drawing.
3.) 3 seater bench, surface mount with perforated mesh seat pan, and intermediate armrests shown.

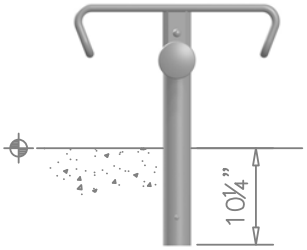

EMBEDDED
OPTION 'B'

SURFACE MOUNT
OPTION 'B'

FREE STANDING
OPTION 'B'

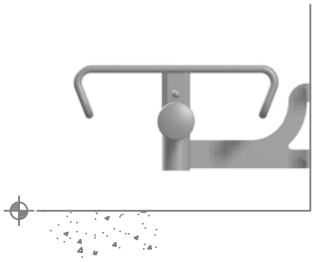

WALL MOUNT
OPTION 'B'

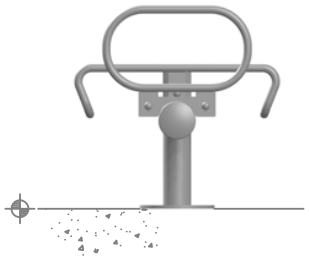

WITH ARMREST
OPTION 'D'

WITHOUT ARMREST
OPTION 'D'

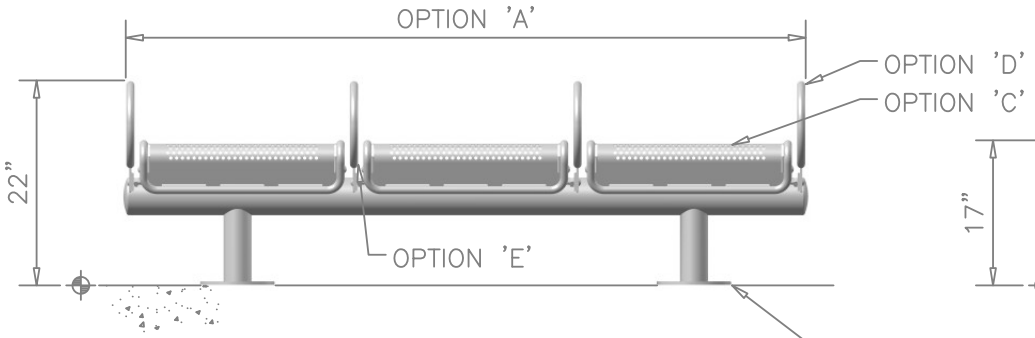

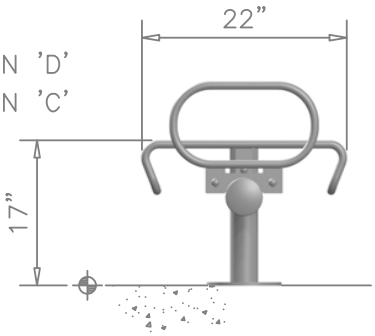

BACKLESS BENCH
FAIRMONT SERIES

49 Life Sciences Parkway • Steinbach, MB R5G 2G7
Phone: 1-800-775-0018 • (204) 320-1801
Fax: (204) 346-1450
Email: info@urbanpark.com
Visit Us At: www.urbanpark.com

urban park

SPECIFICATION SHEET

Fairmont Series
Backless Bench

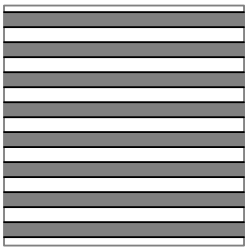

☐ Round Bar

☐ Perforated Mesh

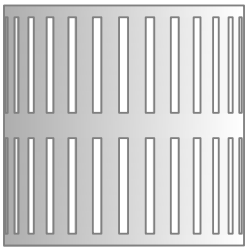

☐ Vertical Slot

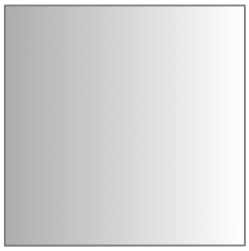

☐ Solid

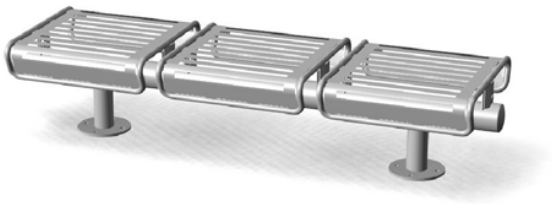

☐ Horizontal Slot

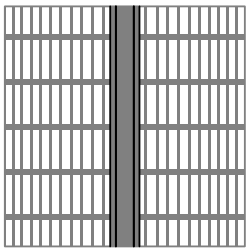

☐ Wire Mesh

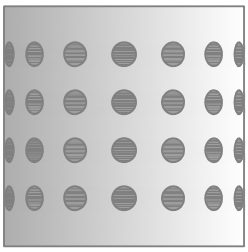

☐ Embossed

☐ Custom